CONFLICT 16

SCALE 1"=100'

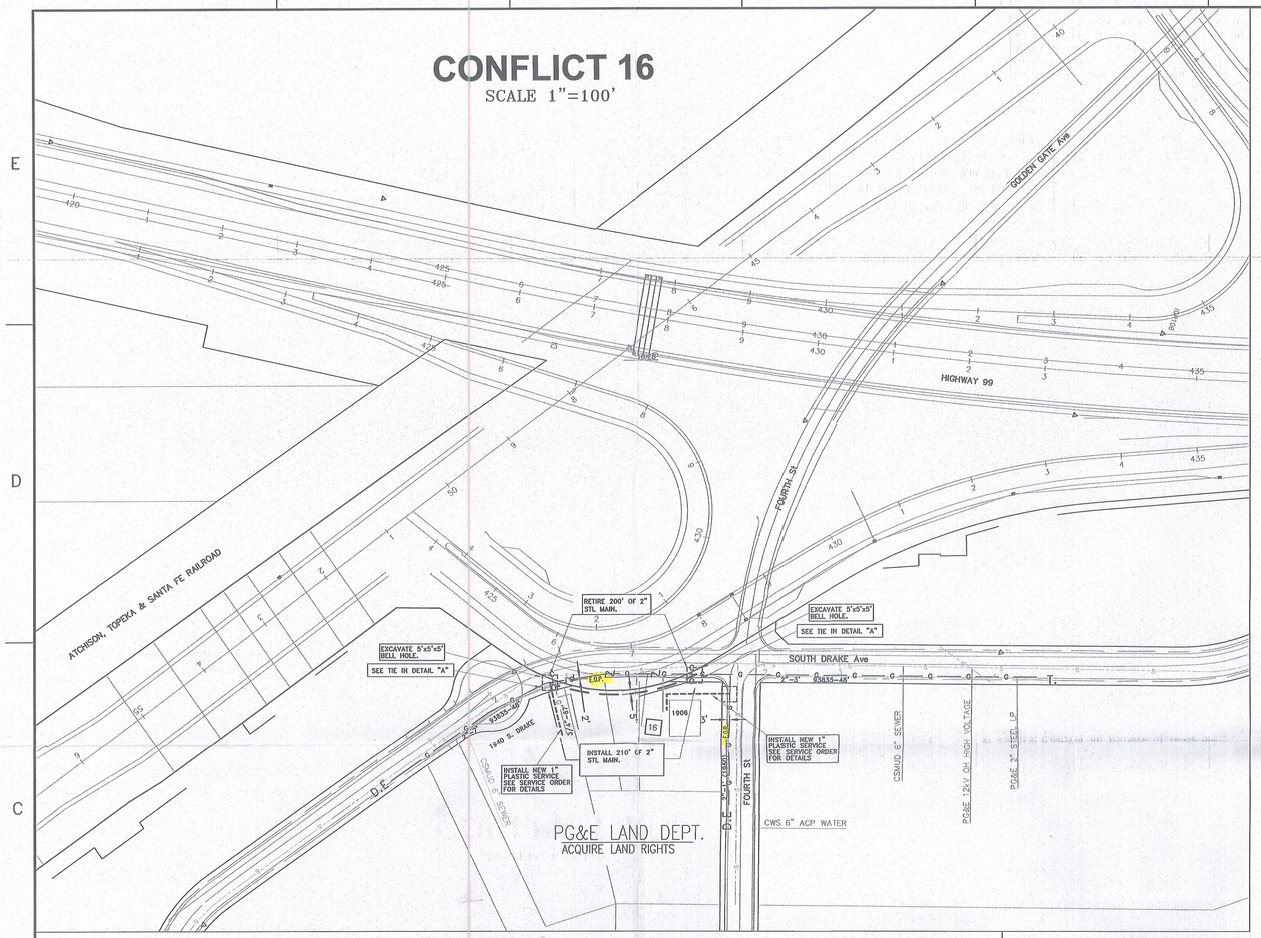

CONTRACTOR CONSTRUCTION REFERENCES

1. REFER TO GAS STANDARDS A-90 & A-91 FOR TYPICAL DIRECT BURIAL PLASTIC GAS MAIN AND SERVICE INSTALLATION, DRAWING #'S 283429 & 283430.
2. REFER TO GAS STANDARDS A-90.1 & A-91.2 FOR TYPICAL PLASTIC GAS MAIN AND SERVICE INSERT CONSTRUCTION, DRAWING #'S 283725 & 283431.
3. REFER TO GAS STANDARDS A-90.2 & A-90.3, D-12, D-13.1 & D-14 FOR TYPICAL ANODE AND LOCATING WIRE INSTALLATION ON DIRECT BURIAL PLASTIC GAS MAIN AND SERVICES, DRAWING #'S 283752, 283753, 282650 , 283593 & 283975.
4. REFER TO GAS STANDARDS A-91.3 & A-91.4 FOR TYPICAL GAS SERVICE RISER INSTALLATION, DRAWING #'S 284193 & 283967.
5. REFER TO GAS STANDARD A-34 FOR TEST CRITERIA ON GAS MAIN AND SERVICES.
6. PACIFIC GAS AND ELECTRIC TO PERFORM ALL HOT TIE-INS AND PURGING OF GAS PIPING PER GAS STANDARD A-38.
7. CONTRACTOR IS RESPONSIBLE FOR CROSSING EXISTING WATER, SEWER AND STORM DRAIN LINES, EITHER UNDER OR OVER, AS REQUIRED TO MEET PG&E COVER AND CLEARANCE REQUIREMENTS. REFER TO INTERIM STANDARD PRACTICE 463-4.
8. THE LOCATION OF ALL EXISTING OR NEWLY INSTALLED WATER, SEWER, AND STORM DRAIN OR OTHER LINES, SHALL BE DETERMINED BY THE CONTRACTOR. THE CONTRACTOR SHALL NOT RELY ON PG&E TO LOCATE FACILITIES. (PG&E WILL LOCATE PG&E FACILITIES UPON PROPER USA NOTIFICATION). CALL USA AT (800) 227-2600.
9. THE CONTRACTOR WILL BE REQUIRED TO REMOVE AND REPLACE TRENCH SPOIL WITH 100% SELECT BACKFILL AS REQUIRED BY PG&E SPECIFICATIONS, AND ANY LOCAL CITY, COUNTY OR STATE REQUIREMENTS.
10. THE CONTRACTOR WILL BE REQUIRED TO PLACE TEMPORARY AND/OR PERMANENT PAVING IN ACCORDANCE WITH ANY LOCAL CITY, COUNTY OR STATE REQUIREMENTS.
11. SPLICE BOXES OR EQUIPMENT TO BE INSTALLED NO CLOSER THAN 1' LATERALLY OVER GAS FACILITIES.
12. DEVELOPER TO PROVIDE AND INSTALL ANY EQUIPMENT PROTECTION (BARRIER POST, RETAINER WALLS ETC...) REQUIRED BY PG&E.

NOTES: APPLICANT TRENCH

1. CALL "USA" 2 WORKING DAYS BEFORE EXCAVATING. UNDERGROUND SERVICE ALERT 1-800-227-2600
2. SPECIFIC CONDITIONS REQUIRED BY PG&E FOR JOINT TRENCH WORK ARE OUTLINED IN PG&E'S UTILITY OPERATIONS STANDARD S5453.
3. BACKFILL MATERIAL REQUIREMENTS ARE DETAILED IN U.O. STANDARD S5453, EXHIBIT B.
4. PG&E INSPECTOR TO APPROVE ALL EXCAVATIONS AND TRENCHES (LOCATION AND BACKFILL MATERIAL) PRIOR TO BACKFILLING.
5. TRENCHING AGENT TO DISPOSE OF ALL SPOIL.
6. MINIMUM COVER FROM FINAL GRADE REQUIRED FOR ALL FACILITIES IN THE STREET AREA.
7. TRENCHING AGENT TO SECURE ALL PERMITS.
8. CONTRACTOR IS RESPONSIBLE FOR CROSSING EXISTING WATER, SEWER, AND STORM DRAIN LINES, EITHER UNDER OR OVER, AS REQUIRED TO MEET PG&E COVER AND CLEARANCE REQUIREMENTS. REFER TO G.S. STANDARD 463-4.
9. THE CONTRACTOR WILL BE REQUIRED TO REMOVE AND REPLACE TRENCH SPOIL WITH 100% SELECT BACKFILL AS REQUIRED BY PG&E SPECIFICATIONS, AND ANY LOCAL CITY, COUNTY, OR STATE REQUIREMENTS.
10. THE CONTRACTOR WILL BE REQUIRED TO PLACE TEMPORARY AND/OR PERMANENT PAVING IN ACCORDANCE WITH ANY LOCAL CITY, OR STATE REQUIREMENTS.
11. APPLICANT TO PROVIDE AND INSTALL ANY PROTECTION EQUIPMENT (BARRIER POSTS, FENCES, ETC...) REQUIRED BY PG&E.
12. THE APPLICANT/CONTRACTOR WILL ACCEPT RESPONSIBILITY OF MAINTENANCE OF THE TRENCH (E.G. COMPACTION, PAVING, ETC..) FOR A PERIOD OF TWO (2) YEARS OR AS SPECIFIED IN THE PERMIT, WHICHEVER IS LONGER.
13. TRENCHING AGENT TO MAINTAIN THE REQUIRED DISTANCE OF FIVE (5) FEET BETWEEN GAS AND THE WET UTILITIES.

GENERAL NOTES:

ALL EXISTING UTILITIES SHOWN ON THE PLANS HAVE BEEN TAKEN FROM THE BEST AVAILABLE RECORDS, ACTUAL LOCATIONS MUST BE VERIFIED IN THE FIELD BY THE CONTRACTOR. THE CONTRACTOR SHALL PHYSICALLY LOCATE ALL LINES AND SERVICES AND PROTECT THEM FROM DAMAGE DURING CONSTRUCTION. THE COST TO REPAIR OR REPLACE EXISTING UTILITY LINES AND SERVICES DAMAGED BY THE CONTRACTORS CONSTRUCTION OPERATION SHALL BE THE RESPONSIBILITY OF THE CONTRACTOR.

THE CONTRACTOR SHALL BE RESPONSIBLE FOR CONTACTING ALL UTILITY AGENCIES TO MARK THEIR FACILITIES IN THE FIELD BEFORE ANY EXCAVATION. THE CONTRACTOR SHALL NOTIFY AND CO-ORDINATE ALL WORK WITH ANY AGENCY REQUIRING REMOVAL OR RELOCATION OF THEIR FACILITIES.

FINAL TRENCH ALIGNMENT AND PIPE PLACEMENT (VERTICAL CLEARANCES), WILL BE DETERMINED WHEN EXISTING UTILITIES ARE LOCATED AND OR EXPOSED. (SEE NOTE BELOW).

THE CONTRACTOR SHALL NOTIFY "USA" AT 800 227-2600 OR 811 AT LEAST 48 HOURS BEFORE CONSTRUCTION

PLAT 3005 F8
CPA 3005-06
STOCKTON

LEGEND

—G—	EXISTING HIGH PRESSURE GAS MAIN
	PROPOSED HIGH PRESSURE GAS MAIN
	PROPERTY LINE
T.	TIES IN TO GAS SYSTEM
D.E.	DEAD END GAS MAIN
	PROPOSED 5'x5'x5' BELL HOLE

VICINITY MAP

STOCKTON

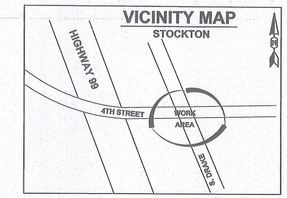

PROPOSED WORK:

- EXISTING 2" GAS MAIN S. OF FOURTH STREET WILL BE IN CONFLICT WITH THE NEW ROAD ALIGNMENT.
- CUT-OFF AND RETIRE (PURGE AND CAP) 200' OF STEEL MAIN
- INSTALL 210' OF 2" STEEL MAIN ALONG THE STREET ALIGNMENT
- INSTALL NEW 1" SERVICE TO 1940 S. DRAKE. TRANSFER SERVICE TO NEW GAS MAIN
- INSTALL NEW 1" SERVICE TO 1906 S. DRAKE, FROM 2" STEEL MAIN OFF OF FOURTH ST.
- SERVICES TO 1920 & 1928 S. DRAKE WILL NO LONGER BE NEEDED.

TIE-IN DETAIL "A"

MAKE 2" STL TO 2" STL TIE

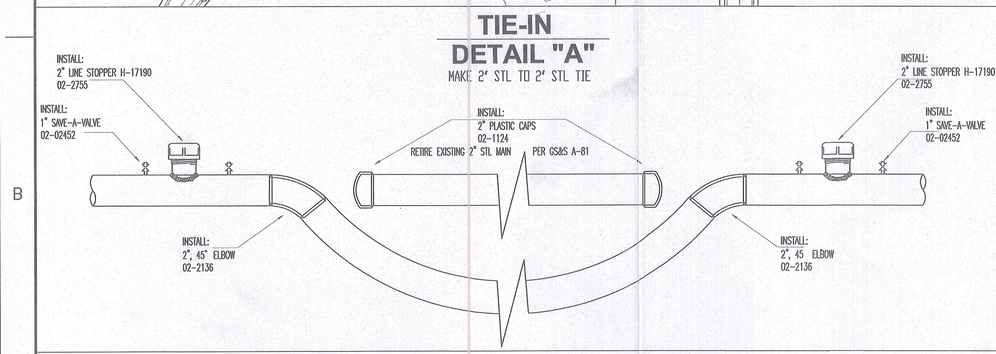

MINIMUM EXCAVATION OVER EXISTING GAS MAIN

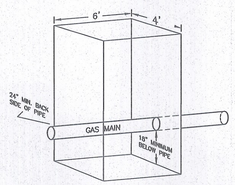

(TYPICAL DETAIL - NOT SPECIFIC TO THIS PROJECT)

TYPICAL GAS ONLY TRENCH

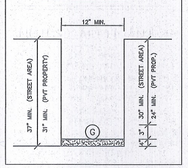

NOTE:
ALL OPEN EXCAVATIONS (BELL HOLES, TRENCHES) MUST BE SAFELY COVERED WITH A ¾" STEEL PLATE DURING NON-WORKING HOURS!

INSTALL DIRECT BURIAL PLASTIC MAINS & SERVICES PER NUMBERED DOCUMENTS A90-A90.2, A93-A93.1 & WP4170-03 WP4170-04, WP4170-05, WP4170-06, WP4170-07 & WP4170-08. INSTALL PLASTIC MAIN & SERVICE INSERT PER NUMBERED DOCUMENTS A90.1-A90.3, A91.2-A93.1 & WP4170-03 WP4170-04, WP4170-05, WP4170-06, WP4170-07 & WP4170-08.

Underground Service Alert
Call: TOLL FREE
811
TWO WORKING DAYS BEFORE YOU DIG

CONSTRUCTION SHALL NOTIFY MAPPING WITHIN 24 HOURS OF ALL OPERATIONAL CHANGES TO MAINS, INCLUDING EVERY TIE-IN, CUT-OFF, UPRATE, ETC., PER U.O. STANDARD S4412.

TEST AT 100-110 PSI FOR MINIMUM OF 5 MIN.

PRESSURE	DURATION	INITIALS	DATE OF TEST

PLASTIC PIPE INSPECTION DATA

SIZE	MANUFACTURER	DATE OF MANUFACTURE

PIPE WRAP REMOVAL

-For work on pre-1972 pipe, assume the wrap contains >1% asbestos until the wrap can be tested.
-Obtain samples of the wrap, and have samples tested for asbestos in accordance with RP 4711.
-Test results are to be included with as-builts.
-Follow procedure in RP 4711 for removal of pipe wrap.

PIPE TYPE: 2" STEEL
YEAR INSTALLED: 1948

CATHODIC PROTECTION IN WORK AREA
ATTENTION FOREMAN:
NOTIFY THE CORROSION DEPT.
AT 209-932-6555 , 24 HOURS
PRIOR TO START OF WORK.

Cathodic Protection Levels Inspected as Noted on Drawing on Existing Protected Steel. All Levels Satisfactory per PG&E GS&S Q-16

Qualified Employee _____ Date _____

NOTIFIED U.S.A.
DATE: _____
TICKET # _____
BY: _____

Welding Inspected per PG&E Gas Standard D-40
Visual ..... ☐
Magnetic Particle ..... ☐
Inspector _____
Date _____

PROJECT CONDITIONS STAMP
Type(s) of Work:
☒ New Business
☐ PG&E Maintenance & Construction
Project Conditions:
☒ NONE APPARENT (If project design changes, contact ADE) or
☐ CONDITIONS APPLY:
☒ PERMITS ☐ TAILBOARD ☐ OTHER
(Provide additional information on line below)
BY: GARY D. WORK (GDWB) 03-23-11
SIGNATURE, DATE, (CORPORATE ID)

ALL FIELD CHANGES REQUIRE APPROVAL FROM:		
KEY CONTACTS	NAME	PHONE
GAS ESTIMATOR	KAMRAN VAHABI	559-347-5052
GAS ADE	NANCY DONNELLY	559-347-5046
PROJECT MANAGER	JAMIE PANTOJA-MARTINEZ	209-942-1641
GAS DIST. ENGINEER	DAVID RYMERS	209-942-1626

CO:
SD:
NOTIF.: 103018821
Other:
SHT: 1 OF 1 SHEETS
PM: 30649126 REV. 0

ENGINEERING ESTIMATING DEPT, RMC
8 RIVER PARK PLACE EAST
FRESNO, CA 93720
PHONE #:(559) 347-5047 FAX #:(559) 347-5353
PG&E PACIFIC GAS AND ELECTRIC COMPANY

EST: KAMRAN VAHABI
ADE: NANCY DONNELLY
SUPV: KEN HENDRICKS
REP: JAIME PANTOJA-MARTINEZ
PLNR: DAVE RYMERS
SCALE: 1"=100' DATE: 10-28-11

NO.	DATE	DESCRIPTION	ORDER #	DWN	CHKD	SUPV	APVD BY
		REVISIONS					

CAL TRANS HWY 99 WIDENING PROJECT
PERMIT DRAWING - CONFLICT 16
S. DRAKE AND 4TH STREET
STOCKTON